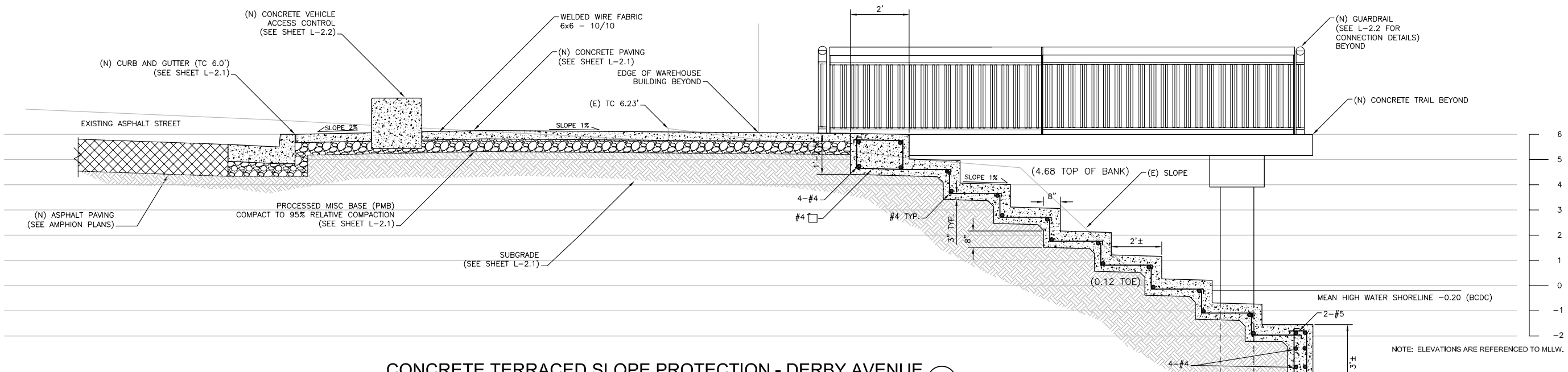

NOTE: ELEVATIONS ARE REFERENCED TO MLLW.

CONCRETE TERRACED SLOPE PROTECTION - DERBY AVENUE (1)

SCALE: 1/2" = 1'-0"

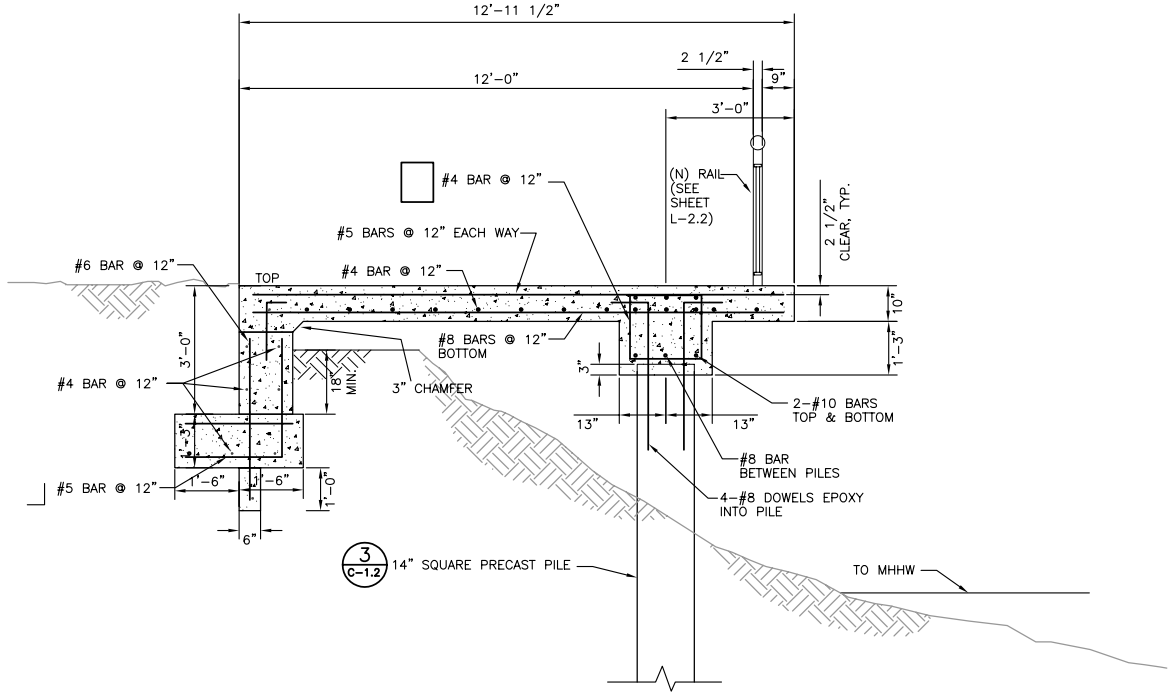

CANTILEVERED TRAIL SECTION (2)

SCALE: 1/2" = 1'-0"

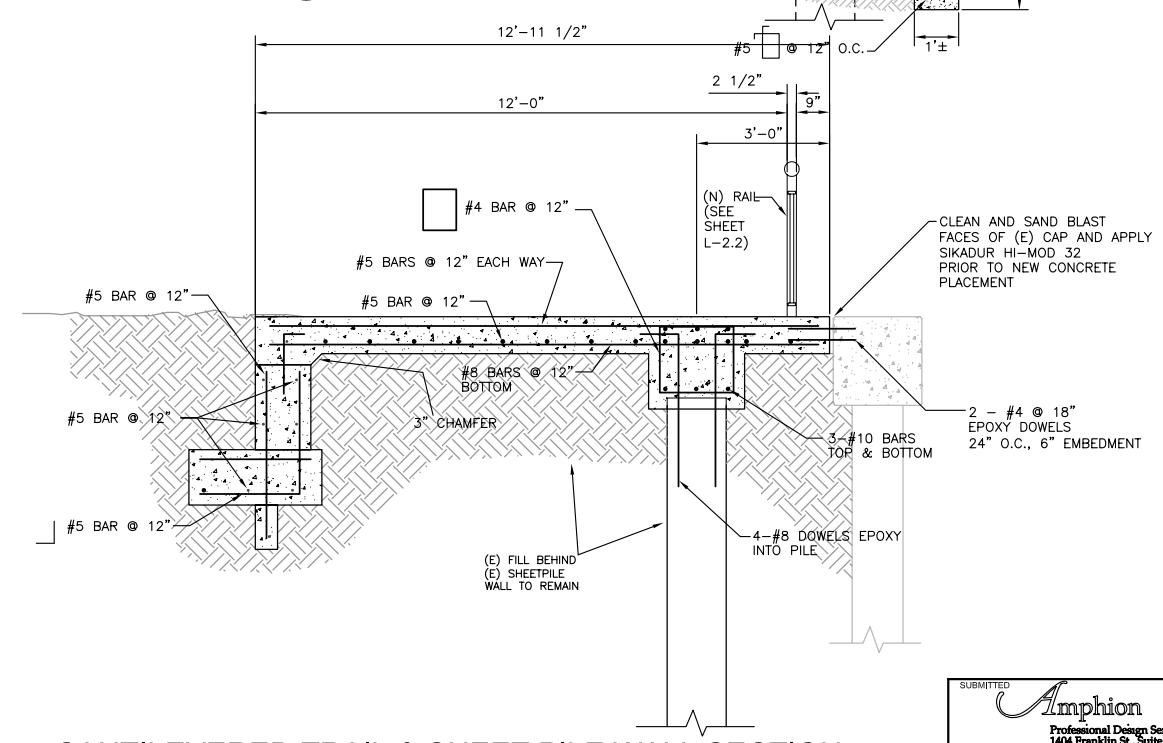

CANTILEVERED TRAIL & SHEET PILE WALL SECTION (3)

SCALE: 1/2" = 1'-0"

100% SUBMITTAL
Not For Construction

SUBMITTED
Amphion
Professional Design Services
1404 Franklin St., Suite 300
Oakland, CA 94612
(510) 893-9888
TranSystems
180 Grand Avenue Suite 400
Oakland, California 94612
PHONE: 510-835-2761
FAX: 510-835-9839

REGISTERED PROFESSIONAL ENGINEER KENNETH A. JOHNSON No. 20039 CIVIL STATE OF CALIFORNIA
Expires: 9/30/06

WATERFRONT TRAIL IMPROVEMENTS
DERBY AVENUE TO LANCASTER STREETS

SUPERVISING CIVIL ENGINEER	DRAWN BY JY/LR
CIVIL ENGINEER	DESIGNED BY GM
	CHECKED BY KAJ

REVISION	DATE	BY	REFERENCE

CITY OF OAKLAND
DESIGN AND CONSTRUCTION SERVICES DEPARTMENT
PROJECT NO. _____

CANTILEVERED CONCRETE TRAIL DETAILS

SCALE: AS NOTED
DATE: JANUARY 12, 2007
SHEET NO. C-1.3